EXPERIMENT No 6:

Connecting LEDs in Parallel

Student Guide

Prepared by BLIS GLOBAL Robotics Department

Copyright @2024

What is a Parallel Circuit?

In a **parallel circuit**, all components are connected directly to the power source, forming multiple paths for the current. The voltage across each component is the same, but the current is divided among the paths.

Steps for Parallel Connection:

1. **Set Up the Power Supply:**
   - Connect the positive terminal of the battery to the **first row** of the breadboard.
2. **Insert the First LED:**
   - Place the first LED on the breadboard, with the **long leg (anode)** connected to the positive terminal and the **short leg (cathode)** connected to a separate row.
3. **Insert the Second LED:**
   - Place the second LED in a different position on the breadboard, but make sure the **long leg (anode)** of this LED is connected to the same row as the positive terminal of the battery, and the **short leg (cathode)** is connected to the same row as the negative terminal.

4. **Add Resistors:**
    - Insert a resistor for each LED between the **cathode** of each LED and the negative terminal of the power supply.
5. **Complete the Circuit:**
    - Connect the negative terminal of the battery to the **negative row** of the breadboard.
6. **Test the Circuit:**
    - Power the circuit. Both LEDs should light up with the same brightness.

Observation:

- Unlike the series circuit, the LEDs should maintain their brightness since they are each receiving the full voltage from the power supply.

Conclusion:

- In a **series circuit**, the voltage is divided among the LEDs, which can result in reduced brightness as more LEDs are added.

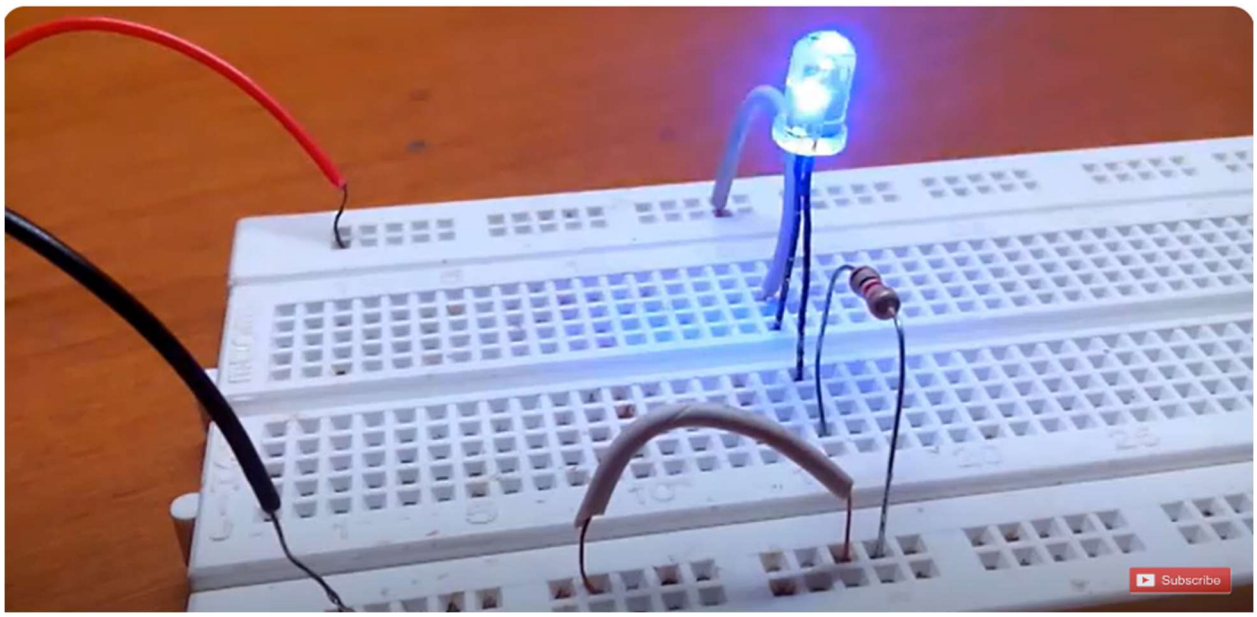

- In a **parallel circuit**, each LED receives the full voltage, and the brightness remains the same, even if more LEDs are added.

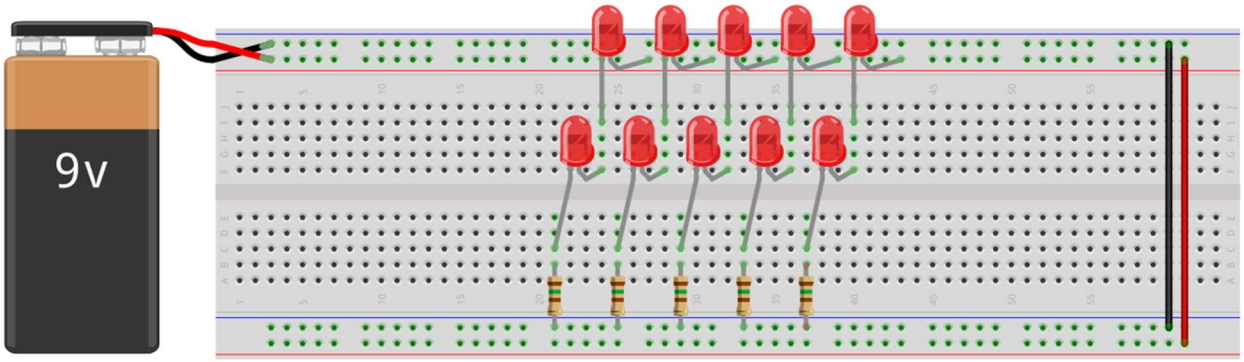

Challenge:

- Try adding a third LED to both the series and parallel circuits. What differences do you notice in terms of brightness and behavior?

This activity will give you hands-on experience in understanding how series and parallel circuit's function and how they affect the behavior of electronic components like LEDs.